Product Data Sheet

Product Name: Myelopeptide-2 (MP-2)
Cat. No.: GP10114

Chemical Properties

Cas. No.	137833-31-9		
SMILES	N[C@@H](CC(C)C)C(N[C@@H](C(C)C)C(N[C@@H](C(C)C)C(N[C@@H](CC1=CC=C(O)C=C1)C(N2[C@@H](CCC2)C(N[C@@H](CC3=CC(C=CC=C4)=C4N3)C(O)=O)=O)=O)=O)=O)=O		
Formula	$C_{41}H_{57}N_7O_8$	M.Wt	775.93
Solubility	≥77.5mg/mL in DMSO	Storage	Store at -20°C
General tips	For obtaining a higher solubility , please warm the tube at 37 °C and shake it in the ultrasonic bath for a while.Stock solution can be stored below -20°C for several months.		
Shipping Condition	Evaluation sample solution : ship with blue ice All other available size: ship with RT , or blue ice upon request.		

Structure

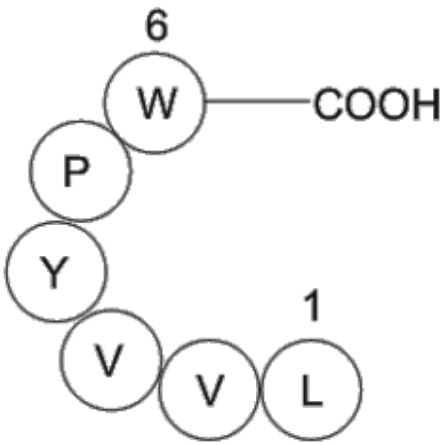

Protocol

Cell experiment [1]:	
Cell lines	human peripheral blood T lymphocytes

Product Data Sheet

Preparation Method	PHA-stimulated human T lymphocytes were cultured with 10%(v/v) HL-60 cell conditioned medium as suppressive substance, and Myelopeptide-2 was added at 0.1-100μg/mL simultaneously with or after 1h/24h exposure to HL-60 CM for 72h; [3H]thymidine incorporation and flow cytometry for CD3, CD4, and CD25 were then measured.
Reaction Conditions	0.1-100μg/mL; 72h
Applications	Myelopeptide-2 abolished HL-60 CM suppression of PHA-induced T lymphocyte proliferative response in a dose-dependent manner. Myelopeptide-2 restored CD3- and CD4-positive cell proportions and CD3- and CD4-positive fluorescence intensity, restored CD25-positive cell proportion reduced by HL-60 CM.
Animal experiment [2]:	
Animal models	female mice (linear and hybrid, 18-20g body mass)
Preparation Method	Mice were transplanted with Ca-755 adenocarcinoma of mammary gland, Lewis lung adenocarcinoma, or S180 sarcoma cells (50mg per mouse) on day 0. Starting from day 3 after transplantation, mice were treated with Myelopeptide-2 dissolved in isotonic solution by subcutaneous injection according to two schemes: 0.5mg/kg five times at 24h intervals, or 1mg/kg or 2mg/kg two times at 96h interval. Control mice received isotonic solution. Tumor volumes were measured on days 7, 14, and 18 after transplantation for calculation of dynamics of growth inhibition (DGT).
Dosage form	0.5-2mg/kg; s.c.; five times at 24h intervals or two times at 96h interval

Caution: Product has not been fully validated for medical applications. For research use only.
Tel: (909) 407-4943 Fax: (626) 353-8530 E-mail: tech@glpbio.com
Address: 10292 Central Ave. #205, Montclair, CA, USA

Product Data Sheet

Applications	Myelopeptide-2 inhibited the growth of Ca-755 adenocarcinoma of mammary gland, Lewis lung adenocarcinoma, and S180 sarcoma in mice.
References:[1] Strelkov LA, Mikhailova AA, Sapozhnikov AM, et al. The bone marrow peptide (myelopeptide-2) abolishes suppression of T lymphocytes induced by human leukemia HL-60 cells. Immunol Lett. 1996 Jun;50(1-2):143-7.[2] Fonina LA, Ovchinnikov MV, Gur'yanov SA, et al. Synthesis and Properties of the retro-Analogue of Myelopeptide MP-2. Russ J Bioorg Chem. 2005;31(3):210-5.	

Background

Myelopeptide-2 (MP-2) is an immunomodulator derived from porcine bone marrow cell culture supernatant. Myelopeptide-2 restores the mitotic reactivity of human T lymphocytes suppressed by HL-60 leukemia cell conditioned medium or measles virus. Myelopeptide-2 can be used in studies on tumor immunosuppression recovery and antiviral immunotherapy[1-4].

In vitro, phytohemagglutinin-stimulated T lymphocytes were incubated with 100μg/mL Myelopeptide-2 and HL-60 cell conditioned medium for 72 hours. Myelopeptide-2 restored T lymphocyte proliferative response. Myelopeptide-2 restored CD3 and CD4 antigen expression and CD25-positive cell proportion[5]. T lymphocytes were treated with 10-25μg/mL Myelopeptide-2 for 18-24 hours. Myelopeptide-2 restored T lymphocyte cytotoxic activity against P-388 leukemia cells[6].

In vivo, urethane-induced BALB/c mice received 10μg/mouse Myelopeptide-2 by intraperitoneal injection daily for 4 days. Myelopeptide-2 reduced the number of spontaneous lung adenomas. Urethane-induced BALB/c mice received 100μg/mouse Myelopeptide-2 by intraperitoneal injection for 25 days. Myelopeptide-2 reduced animal mortality and delayed the first appearance time of lung tumors[7]. Female mice transplanted with Ca-755 cells, Lewis cells, or S180 cells received 0.5mg/kg Myelopeptide-2 by subcutaneous injection once daily for 5 times, or 1mg/kg or 2mg/kg every 96 hours for 2 times. Myelopeptide-2 inhibited transplanted tumor growth[8].

References:
[1] Petrov R. Myelopeptides: new immunoregulatory peptides. Allergy Proc. 1995 Jul-Aug;16(4):177-84.
[2] Sorokina NS, Starostina MV. Myelopeptides Reduce Morphine Tolerance in C57BL/6j Mice. Bull

Product Data Sheet

Exp Biol Med. 2021 Sep;171(5):623-626.
[3] Mikhailova AA, Belevskaya RG, Kalyuzhnaya M, et al. Myelopeptide-2 recovers interleukin-2 synthesis and interleukin-2 receptor expression in human T lymphocytes depressed by tumor products or measles virus. J Immunother. 2006 May-Jun;29(3):306-12.
[4] Svirshchevskaya EV, Belevskaya RG, Roslavtzeva TA, et al. Influence of Myelopeptides on IL-1 and IL-2 Activities. Russ J Immunol. 1997 Apr;2(1):29-36.
[5] Strelkov LA, Mikhailova AA, Sapozhnikov AM, et al. The bone marrow peptide (myelopeptide-2) abolishes suppression of T lymphocytes induced by human leukemia HL-60 cells. Immunol Lett. 1996 Jun;50(1-2):143-7.
[6] Khabarov SV, Gerasimova GK, Mikhailova AA, et al. Myelopeptide-2 Induces the Resistance of T-Lymphocytes to Tumor Suppression. Dokl Biol Sci. 2003;390:282-5.
[7] Mikhailova AA, Kirilina EA, Morozova OV, et al. Effect of Myelopeptide-2 on the Development of Spontaneous and Urethane-Induced Tumors in Mice. Bull Exp Biol Med. 2002 Jan;133(1):68-70.
[8] Fonina LA, Ovchinnikov MV, Gur'yanov SA, et al. Synthesis and Properties of the retro-Analogue of Myelopeptide MP-2. Russ J Bioorg Chem. 2005;31(3):210-5.

Caution: Product has not been fully validated for medical applications. For research use only.
Tel: (909) 407-4943 Fax: (626) 353-8530 E-mail: tech@glpbio.com
Address: 10292 Central Ave. #205, Montclair, CA, USA